K25P 3563

Reg. No. : .....

Name : .....

I Semester M.Sc. Degree (C.B.C.S.S. – OBE-Reg./Supple./Imp.) Examination, October 2025

(2023 Admission Onwards)

PHYSICS/PHYSICS WITH COMPUTATIONAL AND NANO SCIENCE SPECIALIZATION

MSPHY01C04/MSPHN01C04 : Electronics

Time : 3 Hours Max. Marks : 60

SECTION – A

Answer **any 5; each one** carries **3** marks.

1. What is slew rate in OPAMP ? How are slew rate and maximum frequency of operation of OPAMP related ?

2. For an OPAMP having a slew rate of SR = 2 V/μs, what is the maximum closed loop voltage gain that can be used when the input signal varies by 0.5 V in 10 μs ?

3. If input offset voltage V_{IO} = 1.2 mV, calculate the output offset voltage V_o(offset) if R_1 = 150 kΩ and R_2 = 5Ω.

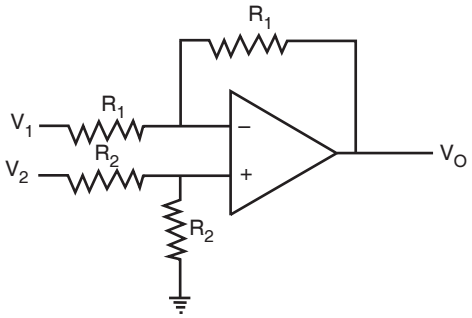

P.T.O.

4. Design a S-R flip flop with proper truth table using NAND gates only.

5. For the circuit shown below find passband gain and cutoff frequency.

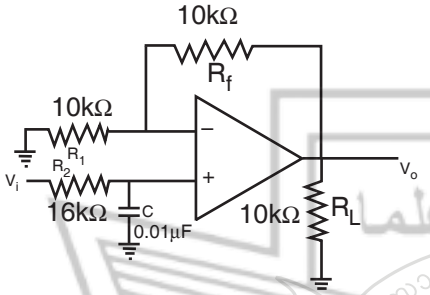

6. Explain with proper circuit diagrams what are the roles of preset and clear inputs in a flip flop circuit. **(5×3=15)**

SECTION – B

Answer **any 3; each one** carries **6** marks.

7. Determine the output voltage of an OPAMP for input voltages of V_{i1} = 200 μV and V_{i2} = 120 μV. The OPAMP has a differential gain of A_d = 6000 and the value of CMRR is 10^5.

8. Discuss phase shift oscillator with proper circuit diagram and analysis.

9. Design a 4-input multiplexer.

10. What are the differences between a microprocessor and a microcontroller ?

11. Discuss with proper diagrams summing and integrator OPAMP circuits.

(3×6=18)

SIR SYED COLLEGE CENTRAL LIBRARY KANNUR UNIVERSITY

SECTION – C

Answer **any 3; each one** carries **9** marks.

12. From the DC analysis find voltage across collector terminals of each of the two AC transistors. Using analysis find the expression for single ended voltage gain of the AC circuit shown below.

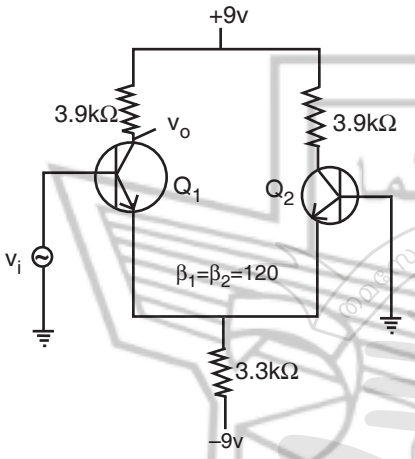

13. With proper circuit diagram discuss the working of (a) square wave generator and (b) triangular wave generator.

14. Discuss weighted resistor type DAC having 4-bit digital inputs.

15. Design a voltage to current converter with floating load.

16. Discuss the architecture of 8085 Microprocessor. **(3×9=27)**

———————

SIR SYED COLLEGE CENTRAL LIBRARY KANNUR UNIVERSITY