K25P 3560

Reg. No. : .....

Name : .....

I Semester M.Sc. Degree (C.B.C.S.S.-OBE – Reg./Supple./Imp.) Examination, October 2025
(2023 Admission Onwards)
PHYSICS/PHYSICS WITH COMPUTATIONAL AND NANOSCIENCE SPECIALIZATION
MSPHY01C01/MSPHN01C01 : Classical Mechanics

Time : 3 Hours Max. Marks : 60

SECTION – A

Answer **any five** questions. **Each** question carries **3** marks.

1. What is a cyclic coordinate ? Give an example.
2. What is configuration space ?
3. What are the three properties of Poisson brackets ?
4. What is the reason why Hamilton H represents the total energy of the system ?
5. Show that angular momentum is the generator of infinitesimal rotation of a rigid body.
6. What are the frequencies of free vibration ? **(5×3=15)**

SECTION – B

Answer **any three** questions. **Each** question carries **6** marks.

7. Obtain the Lagrangian and Lagrangian equation of motion in the case of a two body problem in central potential.
8. Discuss the four generating function for the canonical transformation and show that each one is connected by Legendre transformation.
9. Derive Hamiltonian equations using the Legendre transformation.
10. Derive the Hamilton-Jacobi equation.

SIR SYED COLLEGE CENTRAL LIBRARY KANNUR UNIVERSITY

P.T.O.

11. Calculate the inertia tensor of a homogeneous cube of density ρ, mass M and side of length b. Let one corner be at the origin and let three adjacent edges lie along the coordinate axes as in figure 1.

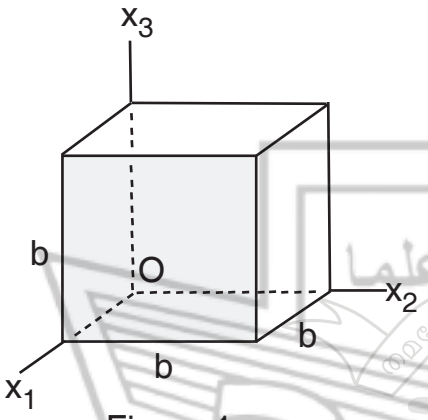

Figure 1 **(3×6=18)**

SECTION – C

Answer **any three** questions. **Each** question carries **9** marks.

12. Derive Lagrange's equation from D'Alembert's principle. **9**

13. The transformation equations between two sets of coordinates are

$Q = \ln(1 + q^{1/2} \cos p)$

$P = 2(1 + q^{1/2} \cos p)q^{1/2} \sin p$

a) Show directly from these transformation equations that Q, P are canonical variables if q and p are. **4**

b) Show that the function that generates this transformation between the two sets of canonical variables is $F_3 = -[\exp(Q) - 1]^2 \tan p$. **5**

14. Derive the Kepler equation of path using the Hamilton-Jacobi method. **9**

15. Using Euler's angles, find the components of the angular velocity vector ω. **9**

16. Determine the eigen frequencies and describe the normal mode motion of a symmetrical linear triatomic molecule given in Figure 2. **9**

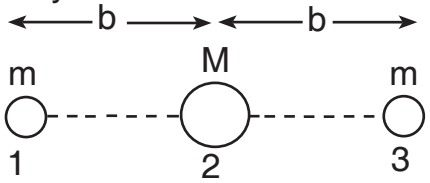

Figure 2 **(3×9=27)**

SIR SYED COLLEGE CENTRAL LIBRARY